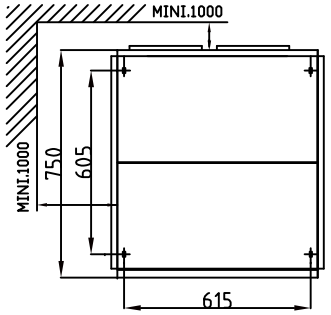

TOP VIEW

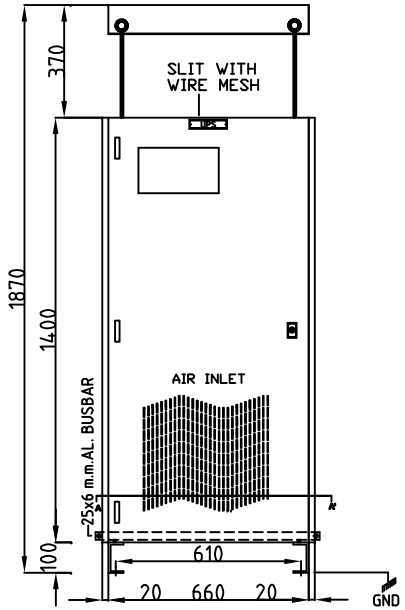

FRONT VIEW

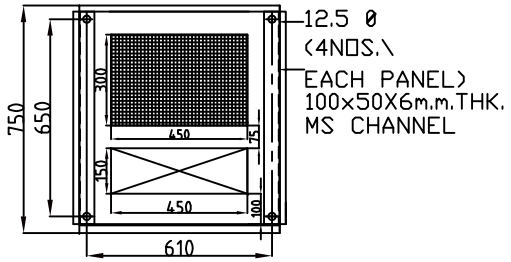

SEC.TOP VIEW A-A'

NOTES	
RECOMMENDED MINIMUM CLEARANCES	* FRONT:- 1000 m.m. * REAR:- 1000 m.m. * TOP:- 500 m.m. * SIDE:- 1000 m.m. * [MULTIPLE PANELS MAY BE STACKED SIDE BY SIDE]
RECOMMENDED OPERATING CONDITION	* AMBIENT TEMP.:-45 deg.C max. * MAX.HUMIDITY:- 95% RH NON CONDENSING
COLOUR	* OUTSIDE :- RAL-7032 * INSIDE :-RAL-7032 * METER PLATE :-BLACK
MATL.	* CRCA STEEL SHEET * FRAME:- 2.0 m.m.THK. * DOORS:- 2.00 & 1.6 m.m.THK.
DEGREE OF PROTECTION :- IP-41	
INPUT TERMINAL HEIGHT OF GND :- MINI.350 m.m.	

APPLICABLE TO

- **15KVA & 20KVA UPS**
- **15KVA & 20KVA SCVS PANEL**
- **15KVA & 20KVA SSVS PANEL**

REV.RECORD	REV.	DESCRIPTION	DATE	APPRD.

DRN.	APPRD.
Jitu	Ajit
06.11.06	06.11.06
SHEET:- 01 OF 01	

TITLE:- **CONFIG OVER VIEW FOR**

DRG.NO. 0 6 5 C 0 A L I 0 0

HI-REL ELECTRONICS PVT.LTD.

UNIT-2,UPS & POWER CONDITIONING DIVISION

REV. 0

ALL DIMENSIONS IN M.M. [NTS.]

DIR. REF.:-ENGG-2/A-0610114