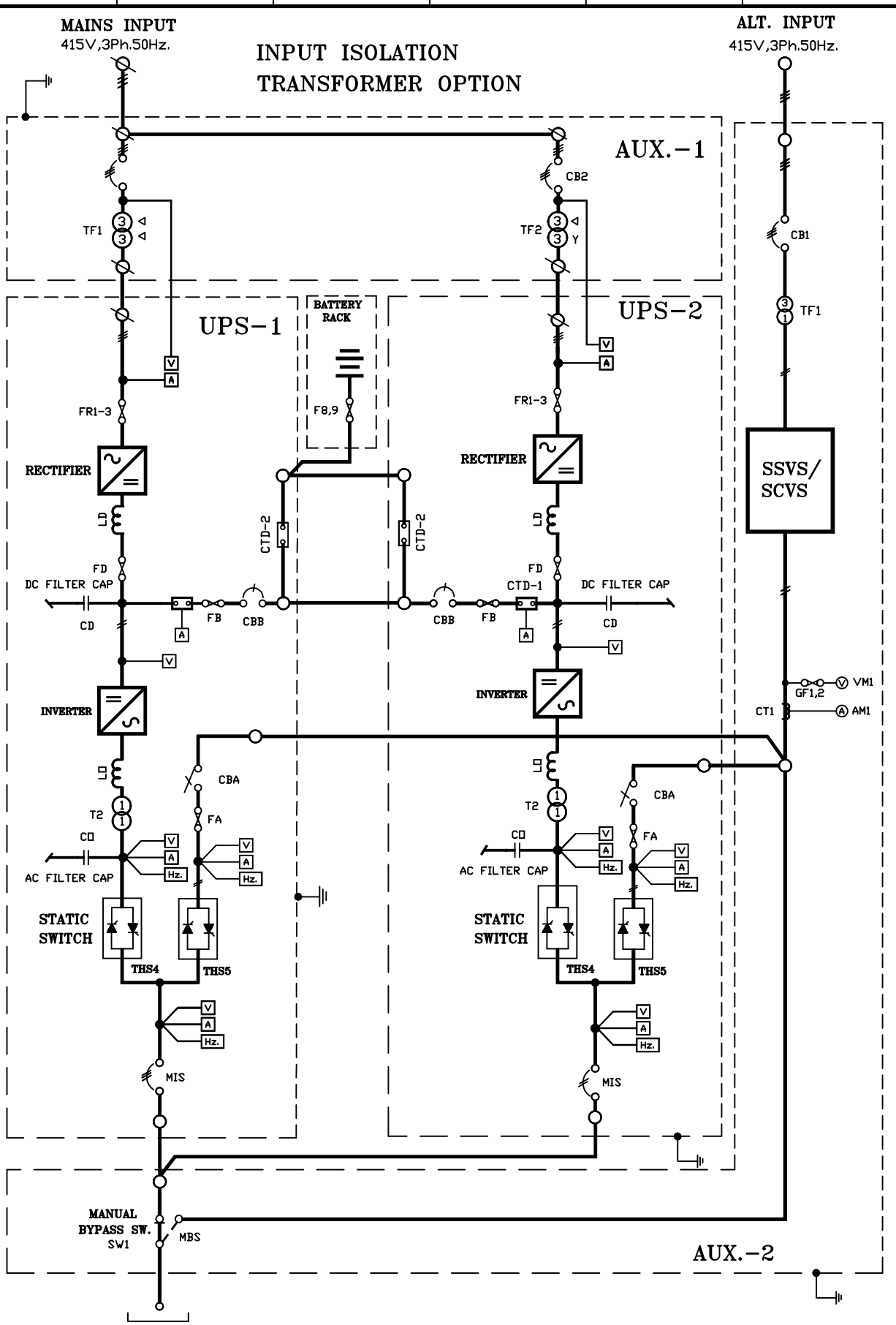

HI-REL ELECTRONICS PVT. LTD.
UNIT-2,UPS & POWER CONDITIONING DIVISION

ALL DIMENSIONS IN M.M.
DIR. REF. :-ENGG2\

REV. 0

TITLE:- SINGLE LINE DIAGRAM FOR UPS SYSTEM
(PAR. REDUNDANT SYSTEM)
(7.5KVA TO 40KVA)

DRG.NO. 0 7 5 C S A L 0 0

DRN.	JTU	23.04.07
APPRD.	AJP	23.04.07

SHEET:- 02 OF 05

REV.	DESCRIPTION	DATE	APPRD.

REV.RECORD