12 PULS RECTIFIER OPTION

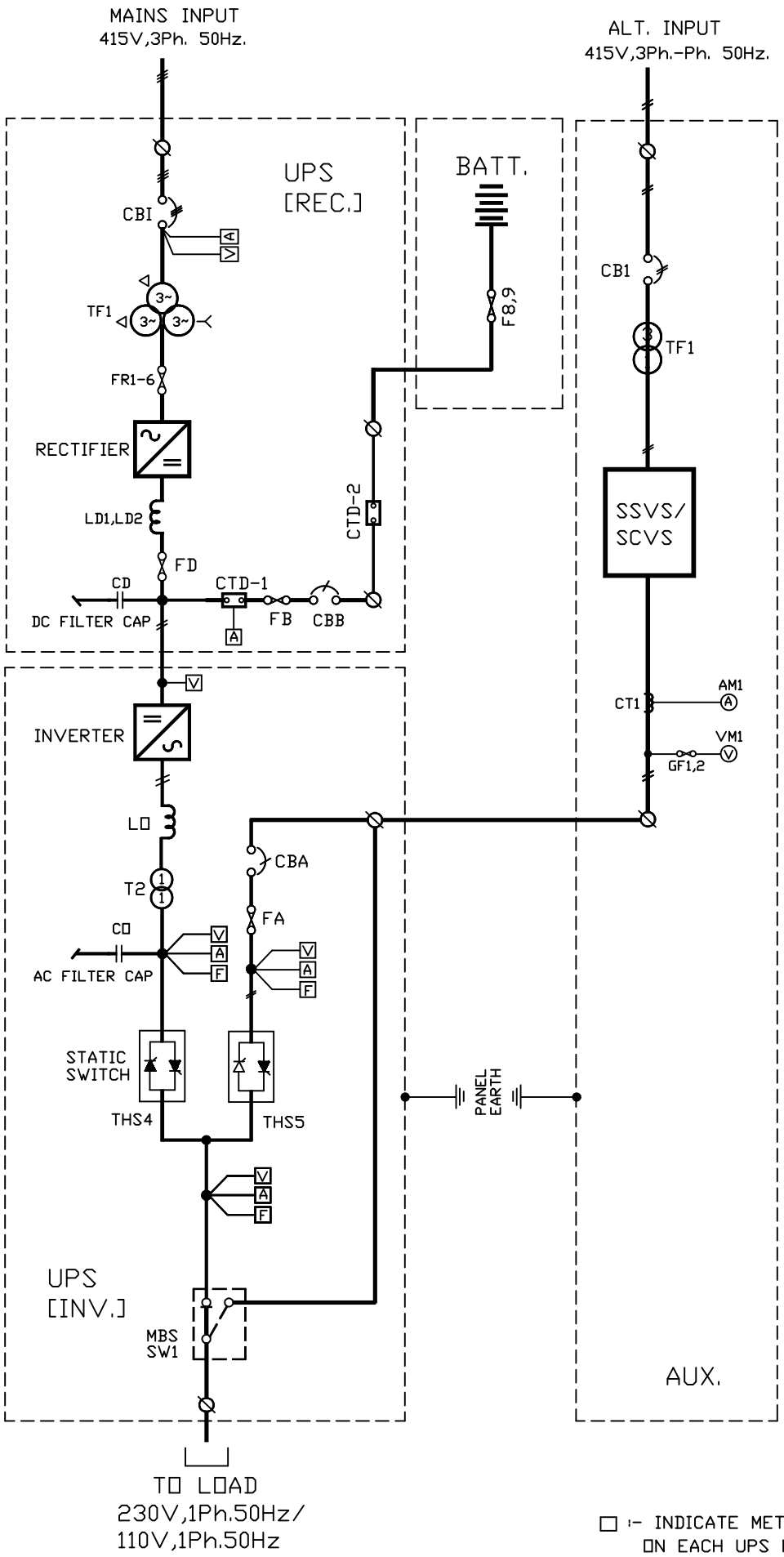

□ :- INDICATE METERING ON LCD ON EACH UPS MODULE.

○ :- INDICATES ANALOG METERING.

HI-REL ELECTRONICS PVT. LTD.

UNIT-2,UPS & POWER CONDITIONING DIVISION

ALL DIMENSIONS IN M.M. [NTS.]

DIR.REF.:-ENGG-2/

REV. 0

TITLE :- SINGLE LINE DIAGRAM FOR UPS SYSTEM (STAND ALONE SYSTEM)

DRG.NO. 0 7 5 C S A L 0 0

	DRN.	APPRD.
	JITU	AJP
	24.04.07	24.04.07

SHEET:- 01 OF 05

REV.	DESCRIPTION	DATE	APPRD.

REV.RECORD